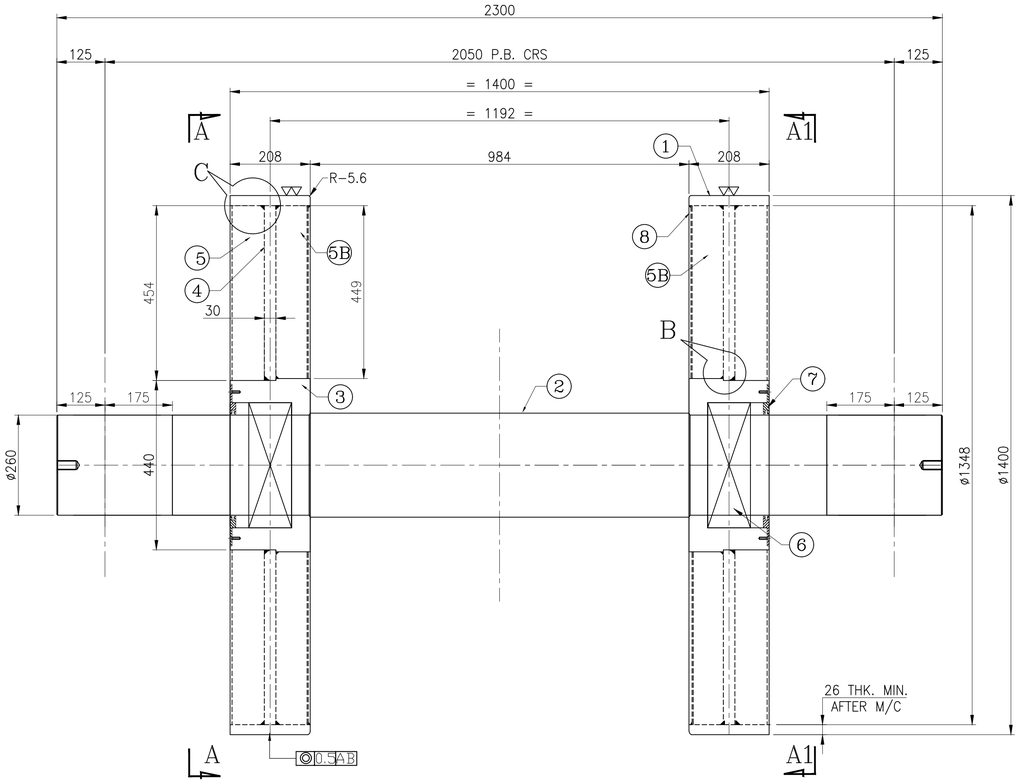

DETAIL OF DEFLECTION WHEEL

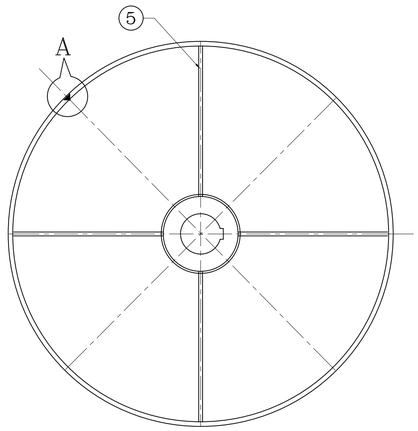

SECTION A:A

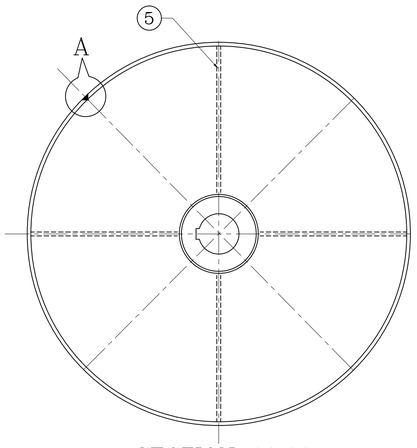

SECTION A1:A1

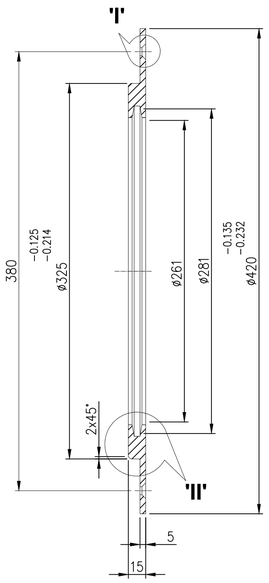

ITEM NO.–7

ENLG'D VIEW

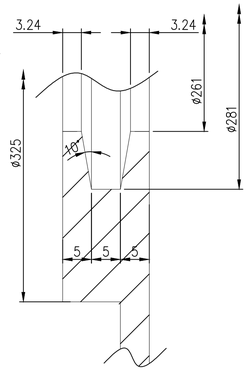

DETAIL–'II'

ENLG'D VIEW

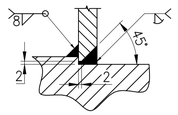

DET.'–"B"

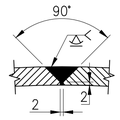

DET.'–"A"

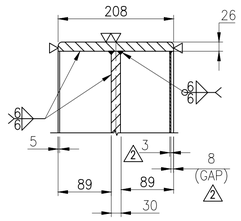

DET.'–"C"

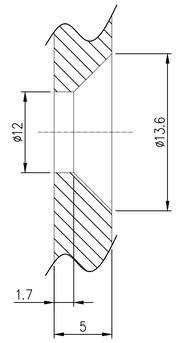

DETAIL–'I'

ENLG'D VIEW

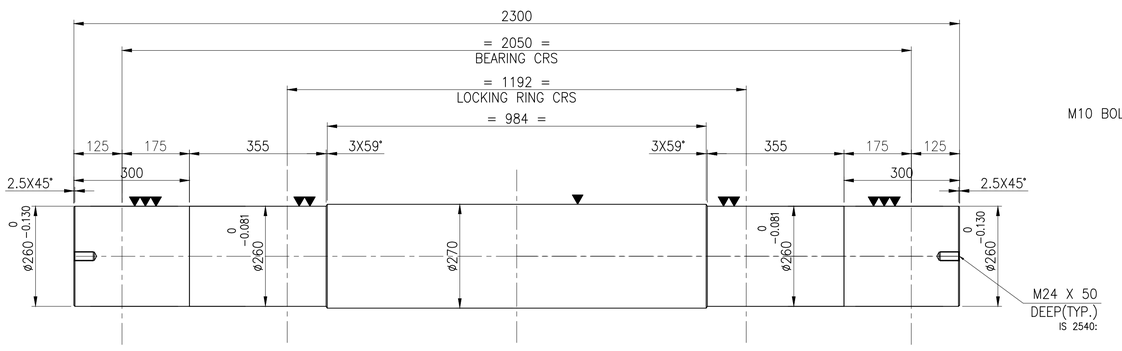

DETAIL OF SHAFT

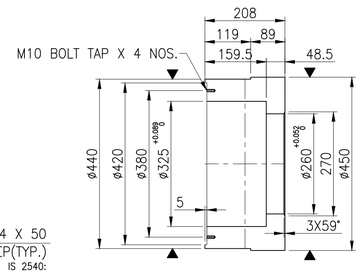

DETAIL OF HUB ③

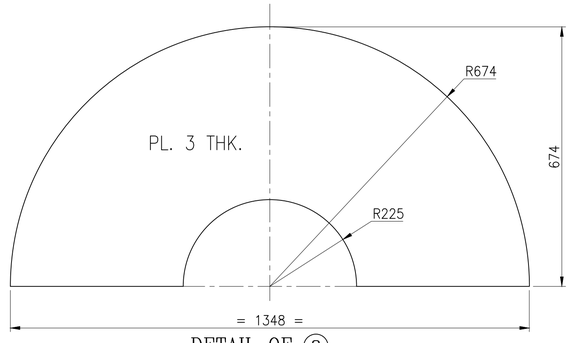

DETAIL OF ⑧

2

TOTAL QTY. REQD. – 2 NOS.

	IT.NO.	QTY	DESCRIPTION	MAT'L	KG. (appx) WT.	REMARKS
			TOTAL WT. OF EACH in KG.(appx.)		2388.52 2	
2	8	4	PL. 3 THK.	IS: 2062	59.7	SEE DETAIL
	7	2	DUST COVER WITH FELT	IS: 2062 AND FELT	32.63	
	6	2	LOCKING ASSLY.	–	–	MAKE: SKF
	5B	8	PL. 10 THK. x 78 x 449 LG.	IS: 2062	21.99	MAKE-RING FEEDER/NMTC/RING SPAN
	5	8	PL. 10 THK. x 84 x 454 LG.	IS: 2062	23.95	
	4	2	PL. 30 THK. x 440 I.D. x 1348 O.D.	IS: 2062	601.57	
	3	2	ROUND ø450 x 208 LG.	EN-8 (FORGED)	248.48	USE > ø450
	2	1	ROUND ø270 x 2300 LG.	EN-8 (FORGED)	1033.75	USE > ø270
	1	2	PL. 26 THK.x 208 x 4316 LG.	IS: 2062	366.45	USE > PL.26

BILL OF MATERIAL/SET

1) ALL DIMENSIONS ARE IN mm UNLESS OTHERWISE SPECIFIED.
2) PULLEY MUST BE STATICALLY BALANCED
3) PULLEY FACE MUST BE CONCENTRIC WITH THE BORE .
4) SHARP CORNERS TO BE CHAMFERED AS REQUIRED.
5) TOLERANCE SHALL BE AS PER IS919-1963; IS:2048-1983; IS:2540-2008 & IS:2102-1993
6) 2 NOS. P.B: SD3056 4 HOLE –ONE SIDE CLOSED ONE NUMBER AND BOTH SIDE OPEN ONE NUMBER (MAKE–MASTA), BEARING AND ADAPTER SLEEVE: 23056 CK+H 3056(MAKE–SKF/FAG),R SLEEVE:23040CK+H3040(MAKE–SKF/FAG), LOCATING RING : FRB10/420–(3 NOS.)
7) ALL WELD JOINT TO BE CHECK DYE PENETRATING TEST & LONGITUDINAL WELDING BY UT.
8) SHAFT, HUB AND DICK TO BE UT TEST.
9) WELDING NEEDS TO BE FULL PENETRATION BUTT (DTAIL-A)
10) PULLEY TO BE BE MANUFACTURING & TESTING AS PER IS:8531

REV.NO.	DESCRIPTION	DATE	DESIGNED	DRAWN	CHECKED	APPROVED
2	ITEM NO.–8 CHANGED & REVSION AS MARKED	21.02.26		P. KAR	T. MONDAL	

REVISIONS

SUPPLER : SYNERGY INDUSTRIAL SERVICES PVT. LTD.
30/1 BALLYGUNGE PLACE, KOLKATA – 700019, INDIA

JOB No. : DOM/000028/24-25

	NAME	SIGN	DATE
DSGN	B.R.D		01.07.24
DRWN	S.GAYEN		18.08.25
CHKD	S.GAYEN		20.08.25
APPD	B.R.D		20.08.25

TITLE : ARRGT. & DETAILS OF DEFLECTION PULLEY

SCALE NTS

PROJECTION

DRG. No. SYNERGY-C19-03-M014-GA-008

SHEET 1 OF 1

SIZE A1 REV. 2

RELEASED FOR: ☐ PRELIMINARY ☐ TENDER ☐ INFORMATION ☐ APPROVAL ☑ CONSTRUCTION